THE
HC-10 CONVERTER

INSTRUCTION AND SERVICE INFORMATION

ESTABLISHED 1910

In order to receive the full unconditional 90-day warranty against defective material and workmanship in this receiver, the warranty card must be filled out and mailed within two weeks of purchase. Please refer to serial number of warranty in correspondence.

THE HAMMARLUND MANUFACTURING CO., INC.
460 West 34th Street : : : : New York 1, N.Y.

Figure 1. The HC-10 Converter

TUBE COMPLEMENT

Symbol	Tube	Type	Function
V1	6BE6	Pentagrid	Mixer - Oscillator
V2	6BA6	Remote Cutoff Pentode	1st IF Amplifier
V3	6BA6	Remote Cutoff Pentode	2nd IF Amplifier
V4	6BV8	Twin Diode - Triode	Delayed AVC AVC - AM detector
V5	12AU7	Twin Triode	Product detector
V6	5Y3-GT	Twin Diode	Rectifier
V7	6AL5	Twin Diode	Noise Limiter - Squelch
V8	6AV6	Twin Diode - Triode	1st AF Amplifier - AVC Clamp
V9	6AQ5	Beam Power Amplifier	AF Power Output
V10	6C4	Triode	BFO

SPECIFICATIONS

Frequency Range:	Coarse adjustment 450 KCS - 500 KCS Passband Tuning ± 3 KCS with calibrations every 1 KC. 8:1 vernier tuning ratio.
Maximum Output:	1.0 watt (Undistorted).
Output Impedance:	3.2 ohms (RETMA standard).
AVC Action:	.005 second attack time and .01 - .1 - 1 second decay time. Off position.
Selectivity:	Upper side band 6 db 1 - 2 - 3 KCS Lower side band 6 db 1 - 2 - 3 KCS Both side bands 6 db .5 - 2 - 4 - 6 KCS
Slot Filter:	Range ± 5 KCS of input frequency. Attenuation over ± 5 KCS range 40 db or better. Calibrations every 1 KC. Maximum attenuation using Slot Depth Control 60 db. 8:1 vernier tuning ratio.
Input Signal Voltage Range: . . .	.005 - 2 volts.
Input Connection:	By means of plug-in adapters supplied.
Beat Frequency Oscillator: . . .	Variable from zero beat ± 2 KCS
Power Supply:	105-125 volts. 50-60 cps. 75 watts
Noise Limiter - Squelch: . . .	Series type provides both positive and negative clipping.
Front Panel Equipment: . . .	Slot Frequency KCS • AM/MCW-CW/SSB Switch Passband Tuning KCS • AVC Switch • Slot Depth • Power-Audio Gain Selectivity KCS • Side band Selector • Beat Frequency Oscillator Noise Limiter - Squelch
Rear Panel Equipment: . . .	Terminal for speaker and AVC connections. Input Jack • Phone Jack • Passband adjustment (Coarse) Controlled AC ON/OFF from front panel control
Dimensions:	9-1/4" long x 9-1/2" high x 7-1/8" deep.
Weight:	15 pounds

INTRODUCTION

The Hammarlund HC-10 Converter represents an entirely new design concept in the conversion of an ordinary communications receiver to modernize it and provide excellent SSB/CW and AM/MCW reception. Basically, the HC-10 is a complete rear section of a receiver, incorporating all the features of the most elaborate communications receivers available. In addition, the HC-10 offers many new functions, all related to improving reliability of reception.

The HC-10 may be used with any communications receiver having an IF between 450 KCS and 500 KCS. The addition of the converter provides the performance of a modern double or triple conversion superheterodyne receiver. When used with a receiver having a low drift factor, it will provide excellent reception.

In operating your new HC-10, you will note that all frequency controls are clearly calibrated so you can always tell the exact part of the passband you are working.

One of the really "special" features of the HC-10 is a razor-sharp slot filter to eliminate co-channel interference. A single knob controls the filter and provides up to 40 db attenuation of the unwanted signals over a total range of 10 KCS. In addition, the slot depth control may be used to obtain an additional 20 db rejection at any one frequency.

A new mode for reception of all types of signals is provided by a versatile IF that has seven selectivity positions covering the upper, lower or both side bands and approaching mechanical filter skirt selectivity. There's no need to guess where the passband is - just select the width of the passband desired in the upper, lower or both side bands.

A special passband tuning control, accurately calibrated, permits fine adjustment for critical SSB or other types of reception. This feature eliminates the need of a fine tuning control on the receiver itself.

To compensate for wide signal input variation, the converter incorporates a delayed, fast attack, variable decay AVC and switch with OFF-SLOW-MEDIUM-FAST positions suitable for all types of reception.

CW and SSB signals are detected by a linear product detector for the highest signal-to-noise ratio and freedom from interference.

A continuously variable dual diode noise limiter and squelch provides freedom from both positive and negative noise pulses. Operation is automatic on AM/MCW, and manually adjustable for CW-SSB signals.

An extremely stable Clapp-type BFO oscillator is used with pitch variable over ± 2 KCS.

INSTALLATION AND OPERATION HINTS

The following notes are included to pass along the results of several months of practical experience in using the HC-10 under all conditions and with many different receivers.

The HC-10 is capable of making any reasonably good receiver out-perform even the most expensive presently available receivers. However, as with any other device capable of so many different functions, careful installation and a little experience are necessary before the user will be able to take full advantage of its capabilities.

Obviously, if the old receiver is guilty of excessive drift, this defect will be accentuated by the excellent selectivity, and especially the skirt selectivity, the HC-10 provides. In receivers using a 6SG7 in the last IF stage, the stage may become unstable when the HC-10 octal adapter is installed. Because of the high GM of this particular tube type, enough feedback may be developed across the cathode choke to cause oscillation. To remedy this trouble, replace the 6SG7 with a 6SK7. No realignment will be necessary since the interelectrode capacities of the two tube types are almost identical. The only noticeable difference, if any, will be a slight loss in gain if the receiver is operated by itself.

Since the HC-10 has its own beat-frequency oscillator, the beat-frequency oscillator in the receiver should be disabled by pulling the beat-frequency oscillator tube out of its socket. If the receiver uses a dual purpose tube, the BFO section of this tube should be disabled by removing B+ from it. By doing this, you avoid the possibility of having two beat frequency oscillators working against one another. At the same time, you will have the additional advantage of using the receiver in the manual RF gain control position or, the AVC position for all forms of reception including CW. If the receiver has a switch that disables the BFO and also provides the choice of AVC or manual RF gain control, the above may be disregarded. The selector switch on the HC-10 will henceforth be employed for the selection of AM/MCW-CW/SSB.

To obtain the full advantage of the HC-10 converter, its initial adjustment must be made to the exact intermediate frequency of the receiver with which it will be used. Even though your receiver has a nominal IF of 455 KCS (the factory adjusted IF of the HC-10) follow the procedure outlined herein for peaking the IF and adjusting the slot filter. Remember that a variation of only one or two kilocycles between the receiver and converter intermediate frequencies will seriously affect the performance of the HC-10. Of course, if the receiver IF differs markedly from 455 KCS, the IF and slot frequency adjustment must be made before any response at all can be obtained from the converter.

In adjusting the HC-10 to a significantly higher IF (in the 500 KCS region), it is quite possible to run into the image of 60 KCS, so that care must be taken not to tune the HC-10 to the image by mistake. Obviously, the image response is the weaker of the two; therefore, tune to the stronger response.

Note

> Since slight deviations from 455 KCS (465 KCS, for example) call for only a very minor adjustment of the tuning slug, the chance of running into the image response is remote, but the possibility should be kept in mind.

Once the slot frequency has been properly set, rotate the SLOT FREQUENCY KCS control fully left or right to prevent the slot filter from rejecting the center frequency or desired signal. Rotate the control knob toward the center only to remove interference.

Since the HC-10 has maximum bandwidth of 6 KCS, the bandwidth of all receivers equipped with variable selectivity should be adjusted to no more than 5 or 6 KC. This will prevent a strong adjacent signal from swamping the receiver's AVC, causing a decrease in gain and other possible undesirable effects.

In CW reception, it is obvious that if the HC-10 is used in the 500 cycle bandwidth condition, it will be very difficult to tune with the average receiver dial, or even with some bandspread dials, because of the extreme selectivity of the converter. It is better to start with a bandwidth of 1 or 2 KCS and then, when the desired signal is tuned in, turn the SIDE BANDS switch to UPPER and turn the SELECTIVITY KCS switch to .5 (500 cycle bandwidth). Use of the 500 cycle bandwidth will improve the signal-to-noise ratio without the loss of gain normally found in other variable-selectivity circuits.

For the best CW response, always offset the beat-frequency oscillator by 500 to 1000 cycles, especially if the 500 cycle bandwidth position of the HC-10 is employed.

For best results on single-side band reception using the HC-10 Converter, always use the BFO control knob in the straight up or zero position. This will result in your obtaining maximum low frequency re-

sponse from the side band signal when the band-pass tuning control is employed, as the final adjustment for good speech intelligibility. Should you desire to sacrifice a little low-frequency response, set the beat-frequency oscillator plus or minus one kilocycle, depending on which side band is being employed. Usually, for best sounding single-side band or more natural reproduction (assuming the transmitter is putting out a signal of good quality) the BFO of the HC-10 will be at or near the zero position.

Practically all heterodynes on AM phone signals can be removed by using the following technique. Assume you are listening to an AM phone signal with a heterodyne on it. The first adjustment to make is to use single side band technique. Put the HC-10 switch in the upper or lower side band positions, using the one that results in the most rejection of the heterodyne. Then adjust the slot filter and the chances are that what is left of the heterodyne can be either greatly attenuated or removed entirely. In some cases, when single side band technique is employed on an AM signal and the AM signal has not been tuned to exact resonance in the first place, you may find upon switching side bands that the signal disappears or becomes distorted. This is only because you have favored one side band when making the initial tuning adjustment, so obviously, when you change to the other side band the receiver is far enough off of resonance either to lose the signal or to obtain distorted AM response. It is also for this reason that the initial tuning adjustments on the HC-10 are so important.

Since the use of the HC-10 converter in no way disturbs the performance of the receiver to which it is connected, the following experiment is suggested as a demonstration of the increased selectivity and other advantages of the HC-10. Two loudspeakers, or one loudspeaker and a switching arrangement will be required for monitoring the output of the receiver and the HC-10.

If the receiver by itself is used to tune in, for example, an AM phone signal, the "S" meter will begin to read and you will begin to hear the AM phone speech as the signal is approached. Assuming that the slot filter and input tuning adjustments have been made properly, the chances are that you will not be able to hear the signal if the speaker is switched to the output of the HC-10 at this time. With the "S" meter reading but not peaked, the signal will still be outside the passband of the HC-10. This is an excellent demonstration of the improved selectivity and skirt selectivity of the HC-10. These improvements are also made apparent by arching the receiver's tuning dial very slightly. On the average receiver, little if any effect will be noted, except possibly a variation of one or two "S" units on the meter. With the HC-10 in operation on one of the narrower bandwidth settings, the chances are that the signal will completely disappear under the same circumstances.

It may be noted upon switching bands on your receiver, that the position of the side band signal is reversed. This is caused by the first mixer oscillator injection frequency changing from below signal to above signal or vice versa on your receiver. When the mixer oscillator is above the incoming frequency, the position of an incoming side band signal is reversed. When below the incoming frequency, the side band signal position is unchanged. As the mixer oscillator on the HC-10 is below the incoming signal, the position of a side band signal through the HC-10 remains unchanged.

INSTALLATION

UNPACKING

Unpack the converter carefully. Make sure the tubes are in place and that the two adapters and plastic hex alignment tool are included. If any of this material is missing, please notify Hammarlund at once.

Note that only two adapters are supplied, a 7-pin miniature and an octal, these being the two most popular. In adapting to receivers using other than these tube types, follow the instructions given below under Connecting To Receiver. (Note figure 3.) If a new adapter must be made up, the choke required may be removed from either of the adapters supplied.

SPEAKER CONNECTION

Connect a 3.2 ohm permanent magnet dynamic speaker (such as the Hammarlund S-100 in matching cabinet) to the two terminals marked GND and SPKR on the rear of the chassis (figure 2).

POWER CONNECTIONS

Before inserting attachment plug into power outlet, make certain power source is 105-125 volts A.C., 50-60 cycles.

CONNECTING TO RECEIVER

Locate the last IF amplifier tube in the receiver. Remove it from the socket, and, if it is a seven-pin miniature tube, plug in the miniature tube adapter provided. (Note: Seven pin adapter is for tubes having pin 7 as the cathode, such as 6BA6, 6AU6, 6BD6. Tubes such as the 6BZ6 and 6BJ6 use pin 2 as cathode, and in such a case the adapter will have to be rewired. For nine pin tubes, an adapter similar to the one shown in figure 3 should be used. An alternate adapter is provided for octal tubes such as 6SK7, 6SJ7, and 6SS7.)

Ground the single wire lead to the receiver chassis. This ground should be as close as possible to the last IF tube socket. Plug the IF tube into the adapter.

At the rear of the converter (figure 2), connect the adapter cable to the INPUT jack and the receiver line cord to the CONTROLLED AC outlet.

PRELIMINARY ADJUSTMENTS

Your Hammarlund HC-10 converter has been factory aligned at 455 KCS. No adjustments may be needed if your receiver IF is tuned to this frequency. The following adjustments should be made if your receiver IF frequency is not 455 KCS.

Turn on converter and receiver. Set POWER AUDIO GAIN control of converter to 5; SLOT FREQUENCY KCS control to UPPER 5 KCS; PASSBAND TUNING KCS to 0; BFO KCS to 0; AVC to MED; AM/MCW-CW/SSB switch to CW; SELECTIVITY KCS to .5; SIDE BANDS to UPPER; NOISE-LIMITER-SQUELCH to OFF.

Tune in signal with receiver, preferably on the lower frequencies to minimize drift while adjustments are made. Make sure signal is tuned to center of receiver IF. With the hexagonal plastic tuning tool supplied, rotate the PASSBAND ADJUSTMENT at the rear of the converter (figure 2) until a beat note is heard in the speaker. Set for zero beat.

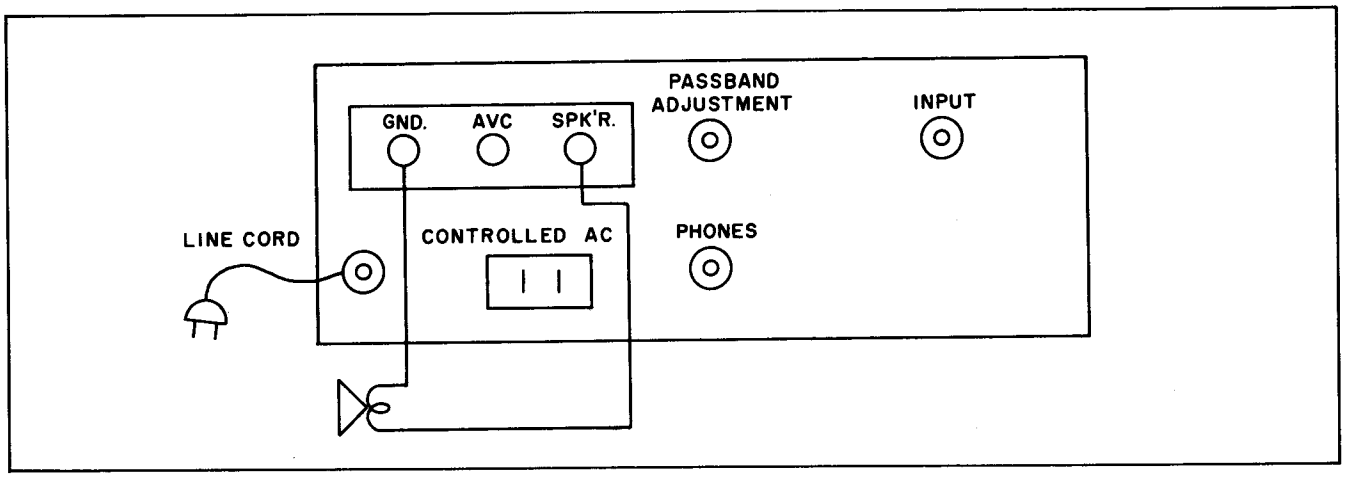

Figure 2. Connection Points at Rear of Chassis

Rotate BFO KCS control knob to approximately 500 cycles. This adjustment is easier to make if receiver is tuned in on a CW signal. A modulated signal may be used if necessary. After rotating BFO KCS control as above, a 500 cycle note should be heard. Rotate SLOT FREQUENCY KCS control to 0 and adjust the SLOT FREQUENCY COARSE TUNING control (figure 7) through the hole located at the upper left side of cabinet (figure 4) with hexagonal plastic tool supplied. This adjustment should be made for minimum signal as heard in speaker. Rotate SLOT DEPTH as necessary to further reduce signal and readjust SLOT FREQUENCY COARSE TUNING with hexagonal tool.

Your HC-10 converter is now ready for operation.

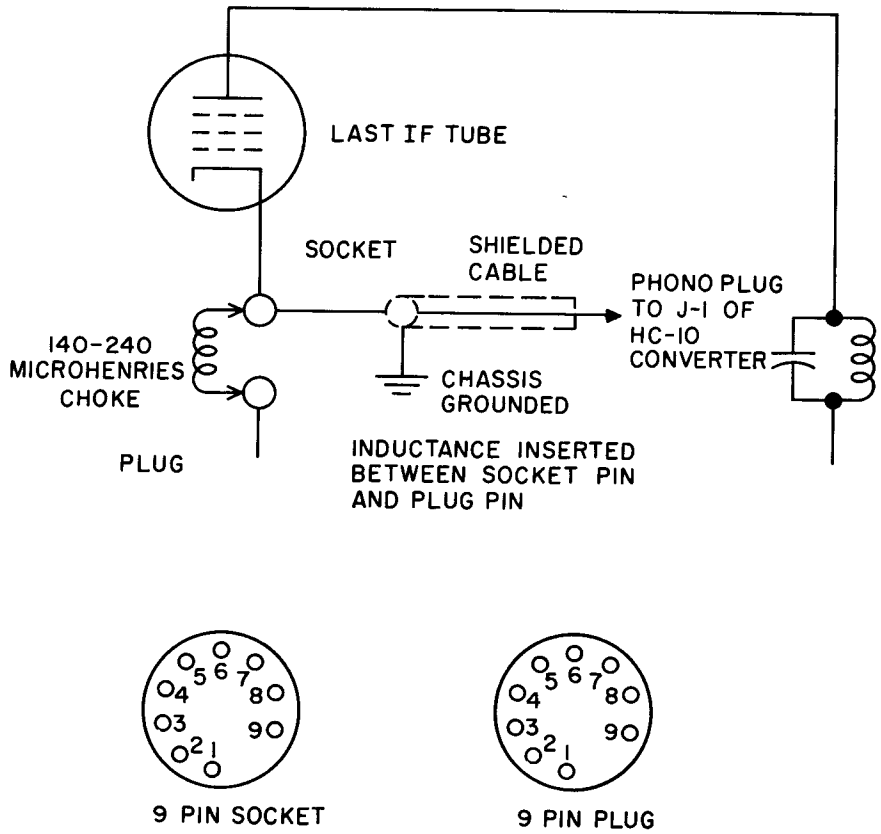

NOTE: Wire like-numbered pins of socket and plug to each other except the cathode. Connect a choke of approximately 140 to 240 microhenries (obtain from either of the adapters) between cathode pins of socket and plug. Connect center of low capacity shielded wire to socket cathode pin. Connect shield to chassis ground. Connect a phono plug to shielded wire and insert into J1 of HC-10 converter.

Figure 3. Nine-pin Adapter Construction Details

OPERATION

AM/MCW RECEPTION

For initial operation, set converter controls as indicated below. Tune in signals with receiver and operate all controls except IF and audio as normally done. Adjust converter controls as required.

NORMAL CONTROL SETTINGS FOR AM/MCW RECEPTION

SLOT FREQUENCY KCS Control	Set to either upper or lower 5. Tune to eliminate co-channel interference.
AM/MCW-CW/SSB Switch	Set to AM/MCW.
PASSBAND TUNING KCS Switch	Set to 0. Use only if desired to move signal across passband.
AVC Control	SLOW or MED.
SLOT DEPTH Control	Use only with SLOT FREQUENCY KCS control to further attenuate interfering signal.
POWER-AUDIO GAIN Control	Rotate clockwise to turn on HC-10 and controlled AC outlet for receiver. Set for desired listening level.
SELECTIVITY KCS Control	Set to 1, 2, or 3 KCS.
SIDE BANDS Switch	Set to BOTH providing bandwidths of 2, 4 and 6 KCS with SELECTIVITY CONTROL.
BFO KCS Control	Not functioning.
NOISE LIMITER-SQUELCH Control	OFF, unless necessary to use as noise limiter or squelch.

CW/SSB RECEPTION

For initial operation, set converter controls as indicated below. Tune in signals with receiver and operate all controls except IF and audio as normally done before. Adjust converter controls as necessary.

NORMAL CONTROL SETTINGS FOR CW/SSB RECEPTION

SLOT FREQUENCY KCS Control	Set to either upper or lower 5. Tune to eliminate co-channel interference.
AM/MCW-CW/SSB Switch	Set to CW/SSB.
PASSBAND TUNING KCS Switch	Use as required for fine adjustment of SSB pitch (natural voice) or to move CW signal across passband.
AVC Control	Slow for SSB or fast for CW.
SLOT DEPTH Control	Use only with SLOT FREQUENCY to further attenuate interfering signal.
POWER-AUDIO GAIN Control	Rotate clockwise to turn on HC-10 and controlled AC outlet for receiver. Set for desired listening level.
SELECTIVITY KCS	SSB 3 KCS. Use 2 KCS for extreme noise and interference conditions. CW .5 KCS.
SIDE BANDS Switch	SSB upper or lower as required. CW upper.
BFO KCS Control	SSB set to 0. CW adjust to suit.
NOISE LIMITER-SQUELCH Control	OFF, unless it is necessary to use as noise limiter.

PURPOSE AND USE OF CONTROLS

SLOT FREQUENCY KCS CONTROL

This control is used to move a rejection slot 5 KCS either side of the center of the passband. As the slot is only about 1.5 KCS wide at the 6 db point, it will provide a means for effectively slicing out a portion of the passband containing interference. It can also

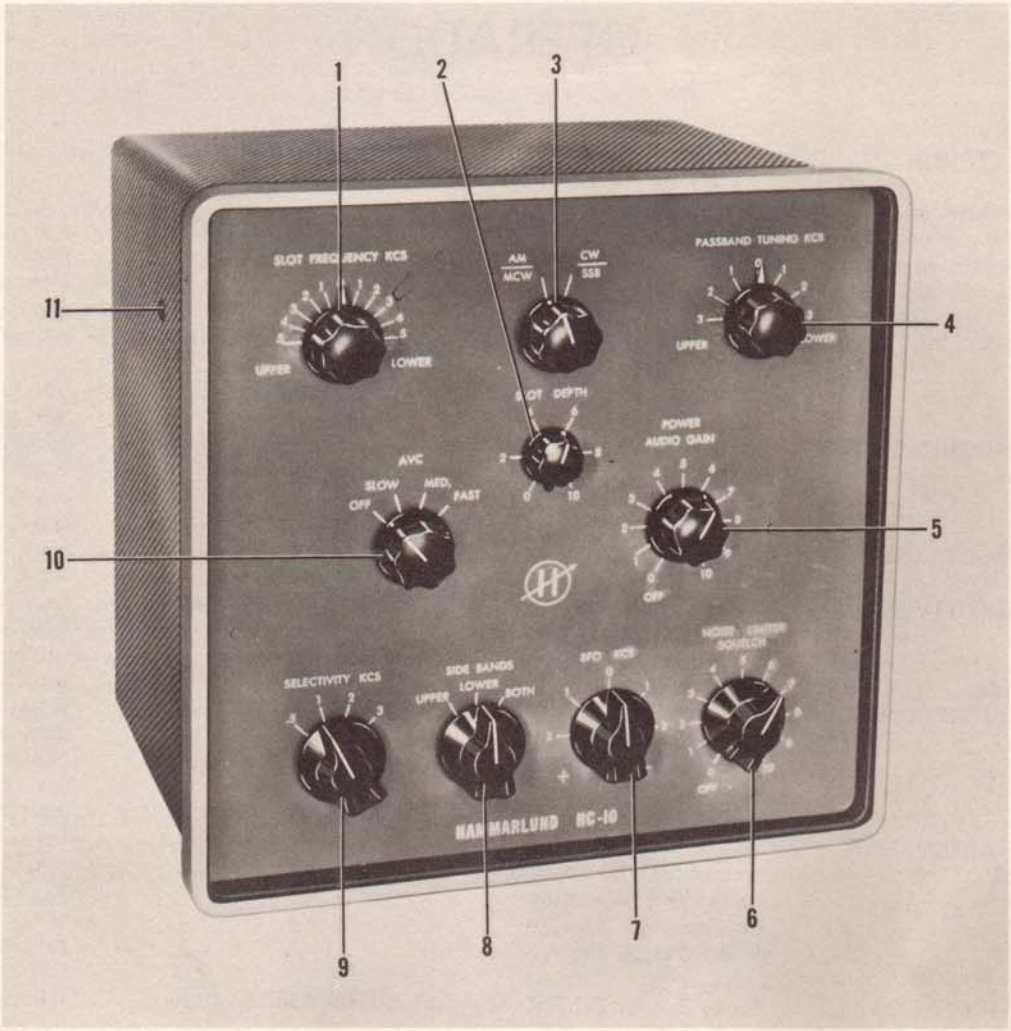

Index No.	Control
1	SLOT FREQUENCY KCS Control
2	SLOT DEPTH Control
3	AM/MCW - CW/SSB Switch
4	PASSBAND TUNING KCS Switch
5	POWER Switch AUDIO GAIN Control
6	NOISE LIMITER-SQUELCH Control
7	BFO KCS Control
8	SIDE BANDS Switch
9	SELECTIVITY KCS Control
10	AVC Control
11	Slot Frequency Course Tuning Adjustment

Figure 4. Location of Controls

be used to improve one side of the passband selectivity to further improve SSB reception. The slot depth control is used to provide additional attenuation at one particular frequency. The rejection takes place before the input grid of the mixer tube, thus preventing spurious responses and possible overload due to strong interfering signals mixing in the 6BE6 tube. The operation of this control is smooth and positive in eliminating unwanted signals at, or up to 5 KCS, either side of the passband center.

PASSBAND TUNING KCS

This control is effectively a vernier on the mixing oscillator, having a range of ± 3 KCS from the passband center. It provides extremely fine tuning useful for SSB operation or for moving the incoming signal across the passband. This feature is especially helpful when the converter is used with receivers not having a high tuning ratio.

SELECTIVITY KCS AND SIDE BANDS CONTROLS

These two controls work together to provide exceptional versatility in the proper selection of the right bandwidth at the correct position in the 60 KC IF passband. The selectivity on upper or lower side bands is very close to that obtained with mechanical filters, while some broadening is accomplished in the BOTH side bands position. This reduces some of the characteristic ringing, and provides a far more pleasing tone for general AM reception.

The SELECTIVITY KCS control has four positions indicating the 6 db nominal bandwidths in the UPPER or LOWER side band positions. For example: if the SELECTIVITY KCS switch were set on 2 KCS and the side bands switch to UPPER, the peak, or center of the IF curve would lie 1 KC above the center of the 60 KC passband, or 61 KCS. If the SIDE BANDS switch were set to LOWER, the peak, or center of the IF curve would be at 59 KCS. The 3 KC selectivity position would place the IF curve center at 61.5 KCS in the UPPER side bands position, or 58.5 KCS on the LOWER side bands position. The IF is aligned at 60 KCS in the .5 KCS position of the SELECTIVITY switch with the SIDE BANDS switch in the UPPER position.

When receiving CW, place the SELECTIVITY KCS and SIDE BANDS switches to the above positions. If the SIDE BANDS switch is turned to the LOWER position, a slight shift of the selectivity curve off center of 60 KCS will occur. This does not affect operation, but sets the center of the passband slightly off the 60 KC nominal. It is not recommended that the .5 KC selectivity position be used with the BOTH OR LOWER SIDE BANDS switch positions. The BOTH position of the SIDE BANDS switch allows the upper and lower side bands to combine, thus doubling the readings of 1, 2, and 3 KCS of the SELECTIVITY KCS switch to 2, 4, and 6 KCS at 6 db, with the 60 KC passband as the center of the IF selectivity curve. This position is generally used for regular AM reception.

For SSB reception, the UPPER or LOWER positions of the SIDE BANDS switch is used with the SELECTIVITY KCS switch set to 2 or 3 KCS. As a point of information, when tuning the receiver toward the high frequency end of the band, and the conversion oscillator is on the high side, the signal will move toward the UPPER passband. If the conversion oscillator is on the low side, the signal will move toward the LOWER passband. The reverse is true when tuning toward the low frequency end.

It is important to know that in some makes of receivers the receiver's oscillator frequency is above the signal frequency on some bands and below it on other bands. Thus, on switching bands, it may appear that what should be the upper side band is readable as the lower side band, and vice versa.

The HC-10 converter mixing oscillator is on the low side of the incoming signal, and therefore the position of the IF side bands is not reversed. i.e., An incoming upper side band IF signal will appear in the upper side band and a lower side band IF signal will appear in the lower side band.

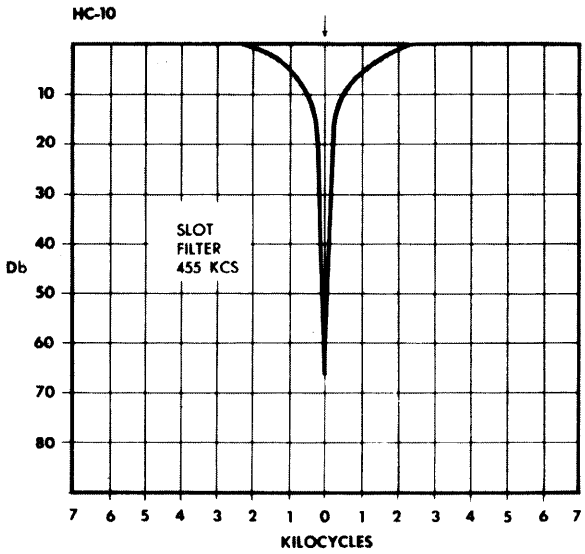

Figure 5. Slot Filter Response Curve

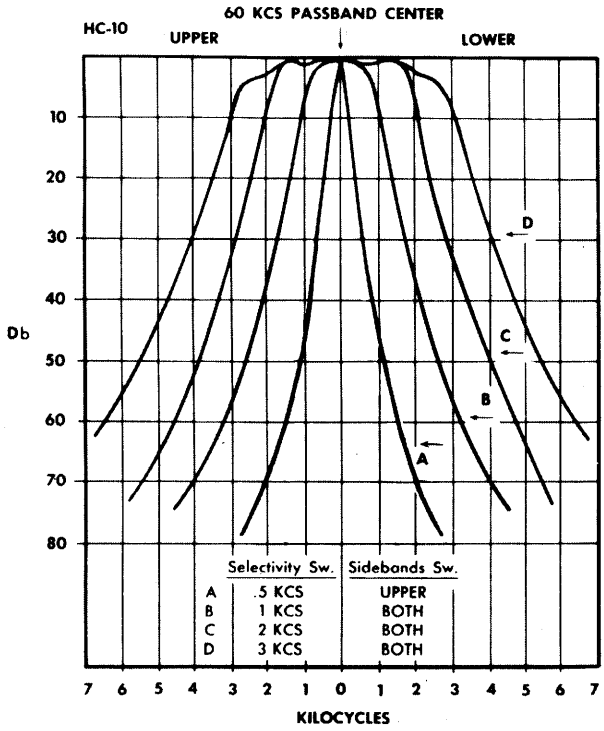

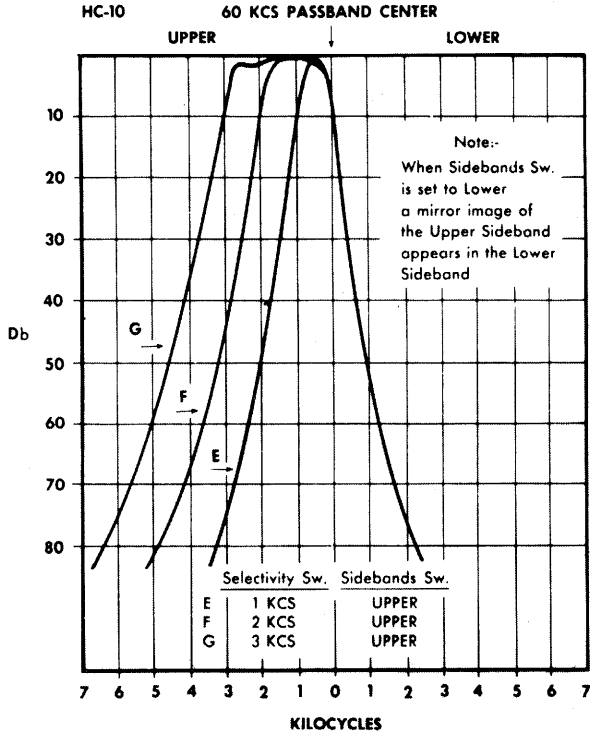

Figure 6. IF Passband Response Curves

CIRCUIT THEORY

The Hammarlund HC-10 is a single conversion superheterodyne converter that will accept all signals in the range of 450 KCS to 500 KCS with levels from .005 volts to 2 volts. A 6BE6 mixer oscillator (V1) is used to convert to a 60 KC IF. The input signal is fed through a bifilar "T" trap circuit that effectively "notches out" interfering signals before they appear on the 6BE6 signal grid. The "T" trap is effective over the entire range of 450 KCS to 500 KCS by means of a coarse (slug) adjustment of L2. Fine tuning of ± 5 KCS is accomplished by the SLOT FREQUENCY KCS control (C11) on the front panel. Resistive balance is controlled by the SLOT DEPTH potentiometer (R8).

The mixing oscillator is controlled by coasre (slug) adjustment of L6 over the range of 390 KCS through 440 KCS. Fine tuning over a ± 3 KC range is provided by the PASSBAND TUNING KCS control (C4) on the front panel.

Stable operation of both the bifilar "T" trap and the mixing oscillator is accomplished by means of high -C circuits incorporating temperature stable capacitors to keep drift to a minimum.

A three-stage, 60 KC (passband center) IF amplifier follows the 6BE6 mixer-oscillator. It incorporates six high-Q tuned circuits (T1 through T6) and associated SELECTIVITY KCS and PASSBAND TUNING KCS switches (S1 and S2) to provide various degrees of selectivity over the entire passband range. High -C tuned circuits with ferrite shielding provide long-time stability and freedom from external fields. Two 6BA6 tubes, (V2 and V3) and the triode section of a 6BV8 (V4) are used as the amplifiers.

AVC control is applied to the mixer (6BE6) and 1st IF amplifier (6BA6).

The two diodes of the 6BV8 (V4) function as delayed AVC, AM and noise limiter detectors. Delay is accomplished by returning the cathode of the AVC diode to a tap on the cathode bias resistor of V9. In the AM/MCW position of S4, the signal is detected in the AM-noise limiter diode of V4 and fed into the 6AL5 dual noise limiter diode (V7). DC from the AM detector diode is fed to the noise limiter control. Tube V7 functions as a positive and negative pulse-clipping limiter and a squelch for AM signals.

The SSB/MCW position of S4 turns on the 6C4 BFO oscillator (V10) and the signal is fed to the 12AU7 linear product detector (V5). The output of the product detector (V5) is fed to the noise limiter (V7). DC for the noise limiter control is obtained from the 6BE6 oscillator grid.

The output of the 6AL5 noise limiter diodes (V7) is fed through the audio gain control to the grid of the 6AV6 audio amplifier AVC clamp (V8). From the plate of V8 the signals are sent to the grid of the 6AQ5 power output tube (V9).

The AVC decay time constants are controlled by the AVC switch (S3) with resistors R43, R41, and R39. Placing a load across the AVC at the rear terminal strip will reduce the decay time proportionally.

The controlled AC receptacle at the rear of the converter chassis (for powering the receiver) is energized when the POWER-AUDIO GAIN control (R49) is rotated clockwise, closing S6. Negative AVC voltage is provided on the rear terminal strip for receiver or control purposes. (Note: This outlet should not be used with a load resistance lower than 1 megohm from AVC to Gnd.) Insertion of a phone plug into the phone jack (J2) disconnects the speaker connected to the terminal strip.

SERVICE AND ALIGNMENT PROCEDURE

Before servicing the converter, disconnect from power source and remove all wires from rear of chassis.

Note

All adjustments should be made with the hexagonal plastic alignment tool provided.

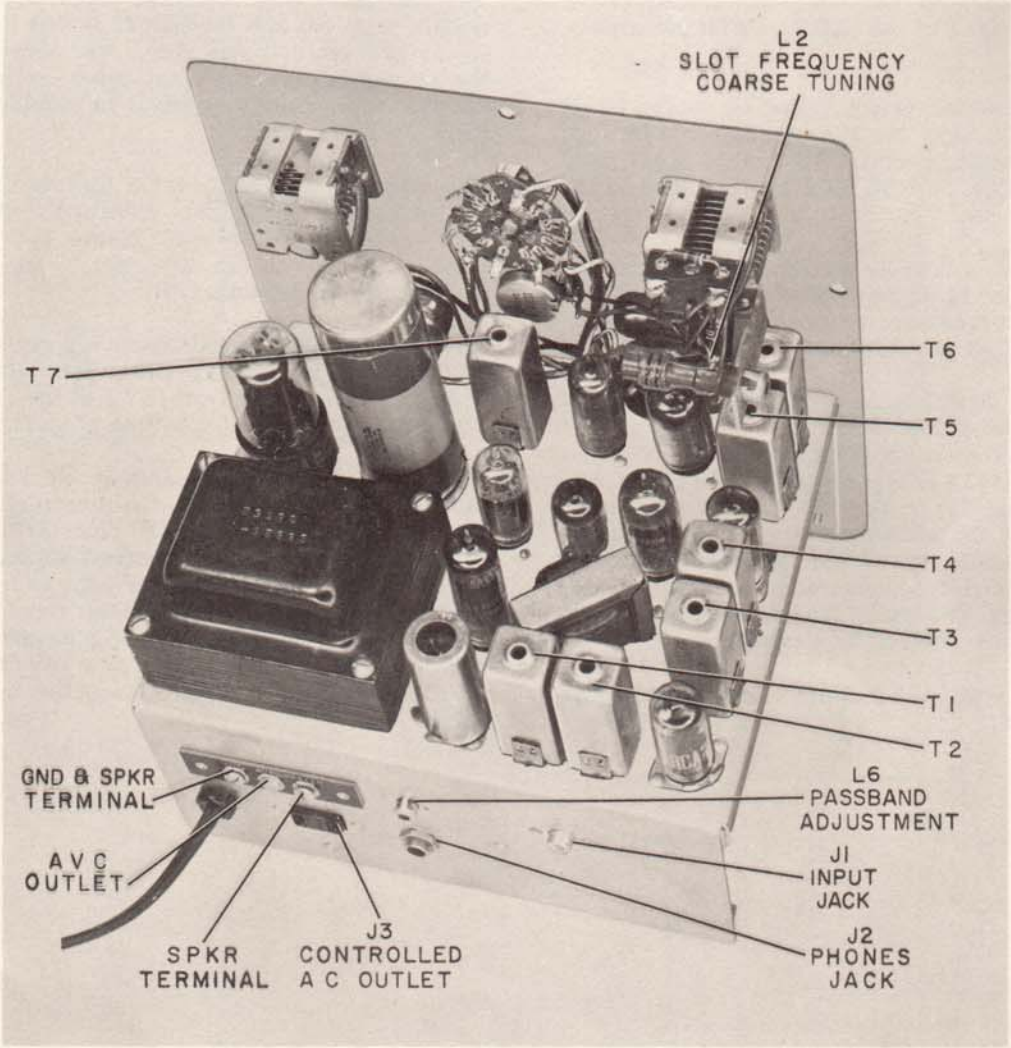

Figure 7. Top View of Chassis

Remove the three Phillips head #8 screws on the front panel which are found in the center and at each side near the top. Remove the four #8 hexagonal screws at the bottom of the cabinet. Push the chassis (with the front panel attached) from the rear. To reassemble, use reverse procedure.

IF ALIGNMENT

Connect an accurate, unmodulated, 60 KC signal of approximately .04 volt to the input jack. Connect a VTVM to the junction of R31 and R32 (available at S4). Set SELECTIVITY KCS control to .5, SIDE BANDS to UPPER, AVC to OFF, and AM/MCW-CW/SSB to AM/MCW.

Peak T1 through T6 for maximum deflections of VTVM. With .04 volt input approximately -5 volt D.C. should be read on VTVM. (Note figure 7.)

BFO ALIGNMENT

Only a known 60 KC ± 100 cps source should be used.

Feed signal to input jack. Set all controls for CW reception. With the BFO KCS control set to 0, adjust T7 for zero beat.

For coarse adjustment of Slot Frequency and Passband Tuning Frequency, refer to section on preliminary adjustments, and use signal generator instead of receiver.

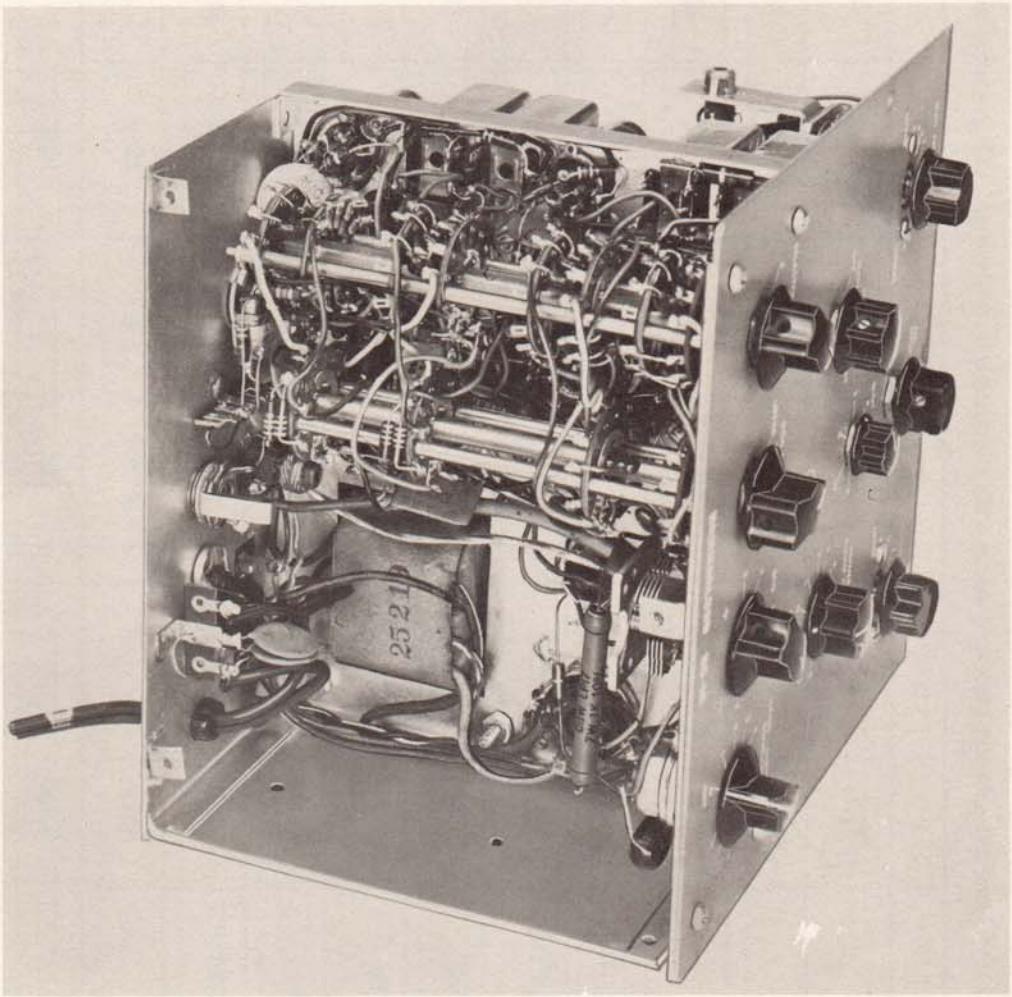

Figure 8. Bottom View of Chassis

TABLE 1. TUBE SOCKET VOLTAGES

Measured from tube socket pins to chassis with vacumm tube voltmeter. All controls maximum counterclockwise position except R49.

TUBE	1	2	3	4	5	6	7	8	9
V1 MIXER 6BE6	-7VDC	0	6.3VAC	0	+270VDC	+84VDC	-.5VDC	-	-
V2 1st IF 6BA6	-.5VDC	0	6.3VAC	0	+270VDC	+250VDC	+31VDC	-	-
V3 2nd IF 6BA6	0	0	6.3VAC	0	+270VDC	+210VDC	+31VDC	-	-
V4 3rd IF 6BV8	+5.5VDC	0	+260VDC	0	6.3VAC	-.3VDC	0	+5.6VDC	-.6VDC
V5 PRODUCT DET. 12AU7	0	-.85VDC	0	0	0	0	-.78VDC	0	6.3VAC
V6 RECTIFIER 5Y3	+270VDC	+300VDC	0	260VAC	0	260VAC	0	+300VDC	-
V7 NOISE LIM. 6AL5	+41VDC	+41VDC	6.3VAC	0	+41VDC	0	+41VDC	-	-
V8 1st AUDIO 6AV6	-.84VDC	0	6.3VAC	0	-.54VDC	-.54VDC	+75VDC	-	-
V9 POWER OUTPUT 6AQ5	+.1VDC	+15VDC	6.3VAC	0	+290VDC	+270VDC	+.1VDC	-	-
V10 - BFO 6C4	0	0	6.3VAC	0	0	-.52VDC	0	-	-

TABLE 2. TUBE SOCKET RESISTANCES

Measured from tube socket pins to chassis with vacumm tube ohmmeter. All controls maximum counterclockwise position.

TUBE	1	2	3	4	5	6	7	8	9
V1 MIXER 6BE6	22K	.3	.1	0	150K	170K	267K	-	-
V2 1st IF 6BA6	517K	0	.1	0	150K	200K	6.8K	-	-
V3 2nd IF 6BA6	470K	0	.1	0	150K	200K	6.8K	-	-
V4 3rd IF 6BV8	560K	15	.1	0	.1	4.7 Meg.	0	160	50K
V5 PRODUCT DET. 12AU7	-	470K	820	0	0	160K	100K	820	.1
V6 RECTIFIER 5Y3	150K	150K	-	100	-	100	-	150K	-
V7 NOISE LIM. 6AL5	220K	1.4 Meg.	.1	0	220K	0	1.4 Meg.	-	-
V8 1st AUDIO 6AV6	4.7 Meg.	0	.1	0	47K	47K	600K	-	-
V9 POWER OUTPUT 6AQ5	500K	430	.1	0	150K	150K	500K	-	-
V10 - BFO 6C4	0	0	.1	0	0	517K	47K	-	-

PARTS LIST

Schematic Designation	Description	Hammarlund Part No.
	PANEL AND CHASSIS ASSEMBLY	
	CAPACITORS	
C4	Passband, variable	K42040-1
C11	Slot filter, variable	K42041-1
	COIL	
L2	Slot frequency inductor assembly	K42034-1
	RESISTORS	
R8	Variable, 200 ohms	K15368-7
R49	Variable, 1 megohm	K15378-2
	SWITCHES	
S3	AVC	K42036-1
S4	AM/MCS-CW/SSB	K42037-1
	CHASSIS ASSEMBLY	
	CAPACITORS	
C1	DM-19, 1200 mmf W.V.D.C.	K23027-4
C2	DISC, 500 mmf 1000 W.V.D.C.	M23034-13
C3	DM-19, 820 mmf 500 W.V.D.C.	K23027-5
C4	DISC, .02 mf 600 W.V.D.C.	M23034-9
C5	DISC, .02 mf 600 W.V.D.C.	M23034-9
C6	DM-15, 100 mmf 500 W.V.D.C.	K23006-1
C7	DISC, .01 mf 600 W.V.D.C.	M23034-14
C8	MYLAR, .033 mf 200 W.V.D.C.	K23044-1
C9	DM-15, 24 mmf 500 W.V.D.C.	K23006-7
C10	DISC, .02 mf 600 W.V.D.C.	M23034-9
C13	DM-15, 24 mmf 500 W.V.D.C.	K23006-7
C14	DISC, .02 mf 600 W.V.D.C.	M23034-9
C15	DISC, .01 mf 600 W.V.D.C.	M23034-14
C16	DISC, .02 mf 600 W.V.D.C.	M23034-9
C17	DISC, 500 mmf 1000 W.V.D.C.	M23034-13
C18	DM-15, 10 mmf 500 W.V.D.C.	K23006-8
C19	DISC, .01 mf 1000 W.V.D.C.	M23034-14
C20	DISC, .002 mf 1000 W.V.D.C.	M23034-18
C21	DISC, .002 mf 1000 W.V.D.C.	M23034-18
C22	DISC, 500 mmf 1000 W.V.D.C.	M23034-13
C23	DISC, .02 mf 600 W.V.D.C.	M23034-9
C24	DISC, .01 mf 600 W.V.D.C.	M23034-14
C25	DUR-PAPER, .047 mf 400 W.V.D.C.	M23045-2
C26	DM-15, 31 mmf 500 W.V.D.C.	K23006-15
C27	DM-15, 29 mmf 500 W.V.D.C.	K23006-16
C28	DM-15, 20 mmf 500 W.V.D.C.	K23006-17
C29	DM-15, 3 mmf 500 W.V.D.C.	K23006-18
C30	DM-15, 28 mmf 500 W.V.D.C.	K23006-19
C31	DM-15, 27 mmf 500 W.V.D.C.	K23006-20
C32	DM-15, 29 mmf 500 W.V.D.C.	K23006-16
C33	DM-15, 31 mmf 500 W.V.D.C.	K23006-15
C34	DM-15, 29 mmf 500 W.V.D.C.	K23006-16
C35	DM-15, 20 mmf 500 W.V.D.C.	K23006-17
C36	DM-15, 3 mmf 500 W.V.D.C.	K23006-18
C37	DM-15, 28 mmf 500 W.V.D.C.	K23006-19
C38	DM-15, 27 mmf 500 W.V.D.C.	K23006-20
C39	DM-15, 29 mmf 500 W.V.D.C.	K23006-16
C40	DM-15, 3 mmf 500 W.V.D.C.	K23006-18
C41	DM-15, 9 mmf 500 W.V.D.C.	K23006-21
C42	DM-15, 10 mmf 500 W.V.D.C.	K23006-22
C43	DM-15, 20 mmf 500 W.V.D.C.	K23006-17
C44	DM-15, 20 mmf 500 W.V.D.C.	K23006-17
C45	DM-15, 16 mmf 500 W.V.D.C.	K23006-23

Schematic Designation	Description	Hammarlund Part No.
	CAPACITORS (continued)	
C46	DM-15, 7 mmf 500 W.V.D.C.	K23006-24
C47	DM-15, 9 mmf 500 W.V.D.C.	K23006-21
C48	DM-15, 14 mmf 500 W.V.D.C.	K23006-25
C49	DM-15, 20 mmf 500 W.V.D.C.	K23006-17
C50	DM-15, 20 mmf 500 W.V.D.C.	K23006-17
C51	DM-15, 16 mmf 500 W.V.D.C.	K23006-23
C52	DM-15, 7 mmf 500 W.V.D.C.	K23006-24
C53	DM-15, 9 mmf 500 W.V.D.C.	K23006-21
C54	DM-15, 14 mmf 500 W.V.D.C.	K23006-25
C55	DUR-PAPER, .1 mfd 200 W.V.D.C.	K23045-3
C56	DUR-PAPER, .1 mfd 200 W.V.D.C.	K23045-3
C57	VARIABLE, 985 mmf (BFO)	K42042-1
C58	DUR-PAPER, .047 uf 400 W.V.D.C.	K23045-2
C59	DUR-PAPER, .047 mf 400 W.V.D.C.	K23045-2
C61	DM-15, 7 mmf 500 W.V.D.C.	K23006-24
C62	DUR-PAPER, .047 mf 400 W.V.D.C.	K23045-2
C63	DM-15, 21 mmf 500 W.V.D.C.	K23006-26
C64	DM-15, 3 mmf 500 W.V.D.C.	K23006-18
C65	DM-15, 7 mmf 500 W.V.D.C.	K23006-24
C66	DM-15, 7 mmf 500 W.V.D.C.	K23006-24
C67	DM-15, 21 mmf 500 W.V.D.C.	K23006-26
C68	DISC, .01 mf 1000 W.V.D.C.	M23034-8
C69	DISC, .01 mf 1000 W.V.D.C.	M23034-8
C70	ELECTROLYTIC, 60-400V, 40-400V, 40-350V, 40-25V	K15504-71
C71	DISC, .01 mf 600 W.V.D.C.	M23034-14
C72	DM-15, 47 mmf 500 W.V.D.C.	K23006-6
C73	MYLAR, .01 mf 400 W.V.D.C.	K23044-2
C74	MYLAR, .01 mf 400 W.V.D.C.	K23044-2
C75	DUR-PAPER, .25 mf 200 W.V.D.C.	K23045-4
C77	DISC, .01 mf 600 W.V.D.C.	M23034-14
C79	DISC, .005 mf 1000 W.V.D.C.	M23034-10
C80	DUR-PAPER, .1 mfd 200 W.V.D.C.	K23045-3
	JACKS	
J1	INPUT Jack.	K42123-1
J2	PHONE Jack.	K35608-1
J3	Power outlet.	K35013-1
	COILS	
L1	Bifilar	K42032-1
L3	Inductor, 330 Millihenries.	K42019-1
L6	Passband Tuning Coil.	K42031-1
	RESISTORS	
R1	43 Ohms, 1/2W ±5%	K19309-192
R2	22,000 Ohms, 1/2W ±10%.	K19309-81
R3	470,000 Ohms, 1/2W ±10%	K19309-113
R4	68 Ohms, 1/2W ±10%.	K19309-21
R5	470,000 Ohms, 1/2W ±10%	K19309-113
R6	68 Ohms, 1/2W ±10%.	K19309-21
R7	160 Ohms, 1/2W ±5%.	K19309-199
R8	1,000 Ohms, 5W ±10%	K19328-1
R9	220,000 Ohms, 1/2W ±10%	K19309-105
R10	100,000 Ohms, 1/2W ±10%	K19309-97
R11	560 Ohms, 1/2W ±10%	K19309-43
R12	1,000 Ohms, 1W ±10%	K19310-49
R13	22,000 Ohms, 1/2W ±10%.	K19309-81
R14	150,000 Ohms, 1/2W ±10%	K19309-101
R15	27,000 Ohms, 2W ±10%.	K19304-52
R16	2,200 Ohms, 1/2W ±10%	K19309-57
R17	330,000 Ohms, 1/2W ±10%	K19309-109
R18	330,000 Ohms, 1/2W ±10%	K19309-109
R19	470,000 Ohms, 1/2W ±10%	K19309-113

Schematic Designation	Description	Hammarlund Part No.
	RESISTORS (continued)	
R20	820 Ohms, 1/2W ±10%	K19309-47
R21	100,000 Ohms, 1/2W ±10%	K19309-97
R22	10,000 Ohms, 1/2W ±10%	K19309-73
R23	47,000 Ohms, 1/2W ±10%	K19309-89
R24	2,200 Ohms, 1/2W ±10%	K19309-57
R25	330,000 Ohms, 1/2W ±10%	K19309-109
R26	330,000 Ohms, 1/2W ±10%	K19309-109
R27	220,000 Ohms, 1/2W ±10%	K19309-105
R28	2,200 Ohms, 1/2W ±10%	K19309-57
R29	47,000 Ohms, 1/2W ±10%	K19309-89
R30	220,000 Ohms, 1/2W ±10%	K19309-105
R31	22,000 Ohms, 1/2W ±10%	K19309-81
R32	47,000 Ohms, 1/2W ±10%	K19309-89
R33	220,000 Ohms, 1/2W ±10%	K19309-105
R34	1 Megohm, 1/2W ±10%	K19309-121
R35	220,000 Ohms, 1/2W ±10%	K19309-105
R36	1,000 Ohms, 1/2W ±10%	K19309-49
R37	220,000 Ohms, 1/2W ±10%	K19309-105
R38	47,000 Ohms, 1/2W ±10%	K19309-89
R39	47,000 Ohms, 1/2W ±10%	K19309-89
R40	4.7 Megohms, 1/2W ±10%	K19309-137
R41	470,000 Ohms, 1/2W ±10%	K19309-113
R42	270 Ohms, 1/2W ±10%	K19309-35
R43	4.7 Megohms, 1/2W ±10%	K19309-137
R44	470,000 Ohms, 1/2W ±10%	K19309-113
R45	47,000 Ohms, 1/2W ±10%	K19309-89
R47	47,000 Ohms, 1/2W ±10%	K19309-89
R48	470,000 Ohms, 1/2W ±10%	K19309-113
R49	47,000 Ohms, 1/2W ±10%	K19309-89
R50	Variable, 500,000 Ohms	K15378-3
R51	680 Ohms, 1/2W ±10%	K19309-45
R52	3,000 Ohms, 1/2W ±5%	K19309-212
R53	15,000 Ohms, 1/2W ±10%	K19309-77
R54	6,800 Ohms, 1/2W ±10%	K19309-69
R55	1,000 Ohms, 1/2W ±10%	K19309-49
R56	270 Ohms, 1/2W ±10%	K19309-35
R57	100,000 Ohms, 1/2W ±10%	K19309-97
R58	1,500 Ohms, 1/2W ±10%	K19309-53
R59	47 Ohms, 1/2W ±10%	K19309-17
	SWITCHES	
S1	SELECTIVITY	K42021-1
S2	SIDE BANDS	K42022-1
S5	NOISE LIMITER	
	TRANSFORMERS AND IMPEDANCE ASSEMBLIES	
T1	60 KCS Coil assembly	M42005-1
T2	60 KCS Coil Assembly	M42005-1
T3	60 KCS Coil assembly	M42005-1
T4	60 KCS Coil assembly	M42005-1
T5	60 KCS Coil assembly	M42005-1
T6	60 KCS Coil assembly	M42005-1
T7	60 KCS Coil assembly	M42005-3
T9	Output transformer	K38828-1
T10	Power transformer	M38826-1
Z1	RC Printed network	K38846-1

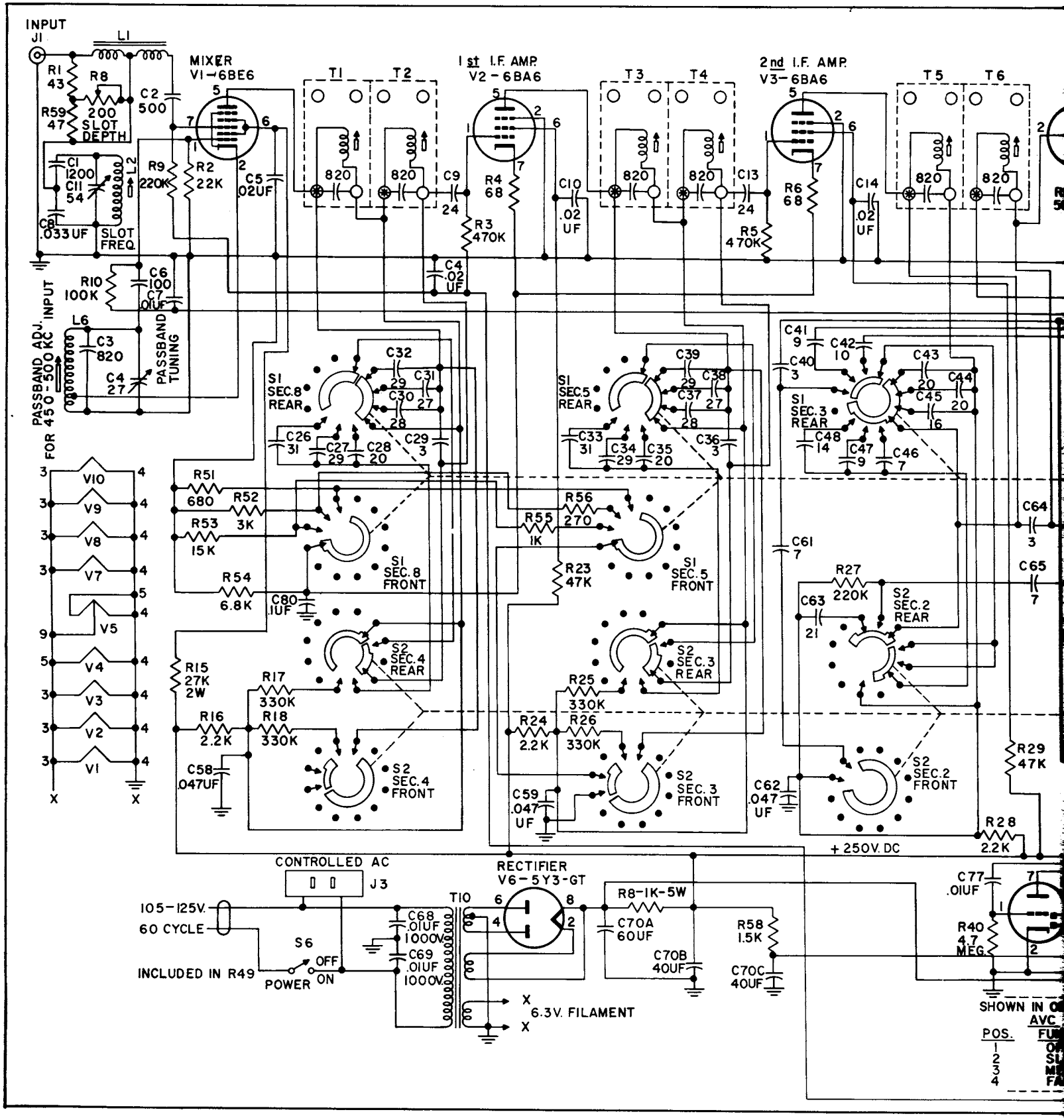
INPUT
J1
L1
R1 43
R8 200 SLOT DEPTH
R59 47
C1 1200
C11 54
C8 .033UF
SLOT FREQ.
L2
C2 500
MIXER
V1-6BE6
R9 220K
R2 22K
C5 .02UF
T1
T2
1st I.F. AMP.
V2-6BA6
T3
T4
2nd I.F. AMP.
V3-6BA6
T5
T6
820
C9 24
R4 68
R3 470K
C10 .02 UF
C13 24
R5 470K
R6 68
C14 .02 UF
C4 .02 UF
R10 100K
C6 100
C7 .01UF
L6
C3 820
C4 27
PASSBAND TUNING
PASSBAND ADJ. FOR 450-500 KC INPUT
S1 SEC.8 REAR
C32
C31
C30
C26 31
C27 29
C28 20
C29 3
S1 SEC.5 REAR
C39
C38
C37
C33 31
C34 29
C35 20
C36 3
C41 9
C42 10
C40 3
C43 20
C44
C45 20
C48 14
C47 9
C46 7
S1 SEC.3 REAR
V10
V9
V8
V7
V5
V4
V3
V2
V1
X
R51 680
R52 3K
R53 15K
R54 6.8K
C80 .1UF
S1 SEC.8 FRONT
R56 270
R55 1K
R23 47K
S1 SEC.5 FRONT
C61 7
C64 3
C65 7
R27 220K
C63 21
S2 SEC.2 REAR
S2 SEC.4 REAR
S2 SEC.3 REAR
R15 27K 2W
R17 330K
R16 2.2K
R18 330K
C58 .047UF
S2 SEC.4 FRONT
R25 330K
R24 2.2K
R26 330K
C59 .047 UF
S2 SEC.3 FRONT
C62 .047 UF
S2 SEC.2 FRONT
R29 47K
R28 2.2K
+250V. DC
CONTROLLED AC
J3
105-125V.
60 CYCLE
INCLUDED IN R49
S6
OFF
ON
POWER
T10
C68 .01UF 1000V.
C69 .01UF 1000V.
RECTIFIER
V6-5Y3-GT
R8-1K-5W
C70A 60UF
C70B 40UF
C70C 40UF
R58 1.5K
6.3V. FILAMENT
C77 .01UF
R40 4.7 MEG.
SHOWN IN O
AVC
POS.
1
2
3
4

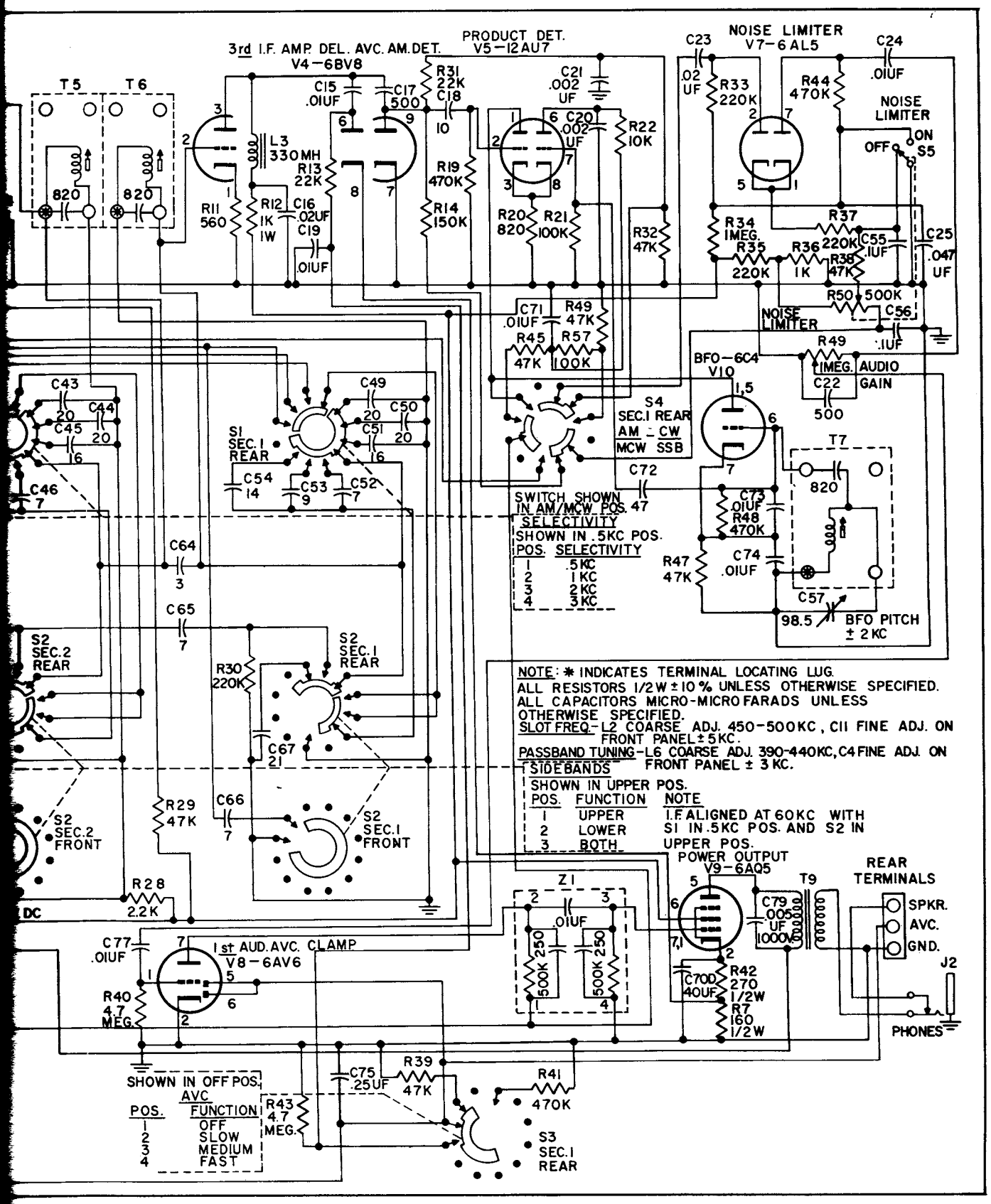

Figure 10. Schematic Diagram